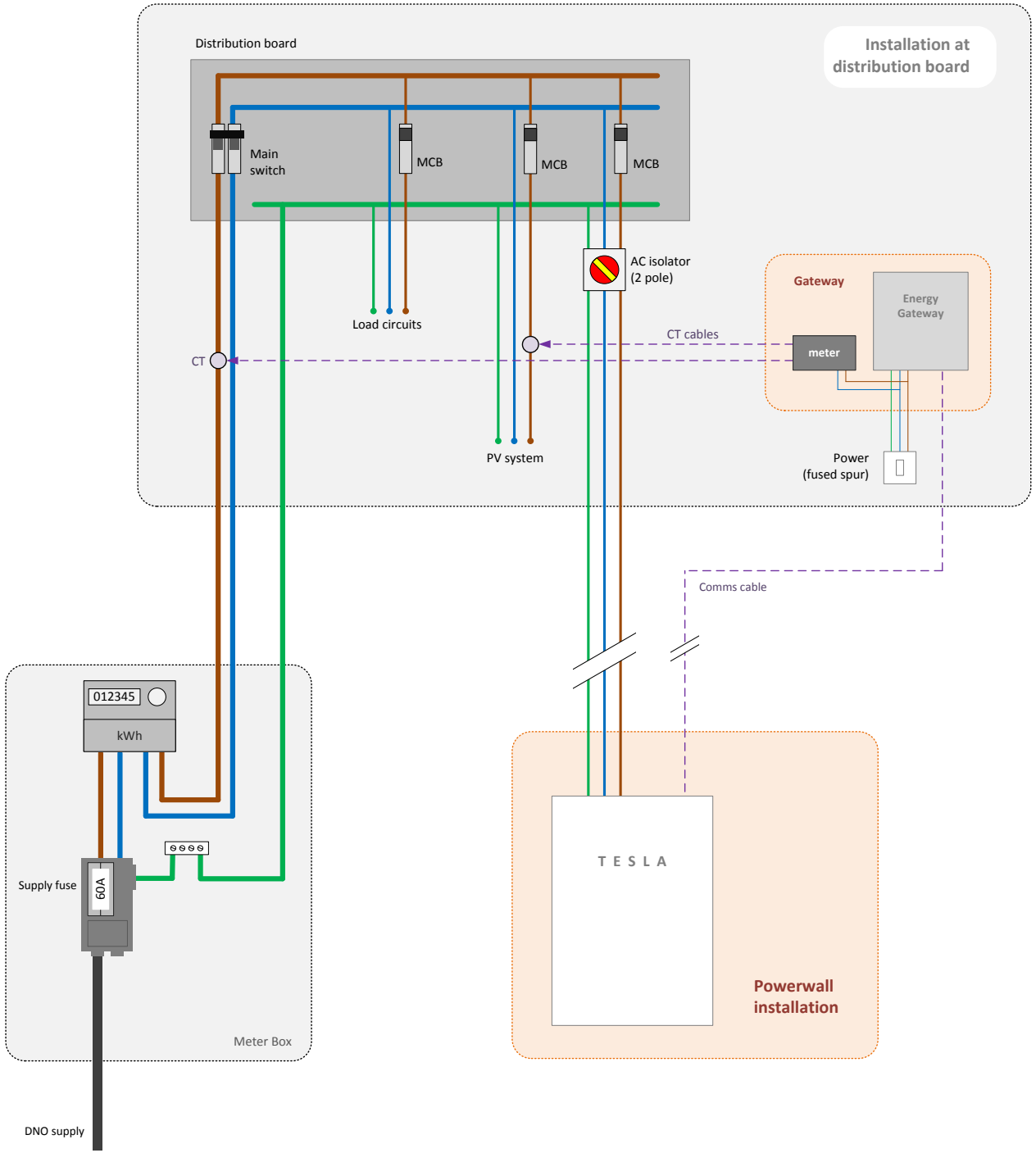
Distribution board
Installation at distribution board
Main switch
MCB
MCB
MCB
AC isolator (2 pole)
Gateway
Energy Gateway
meter
CT cables
Load circuits
CT
PV system
Power (fused spur)
Comms cable
012345
kWh
Supply fuse
60A
Meter Box
TESLA
Powerwall installation
DNO supply